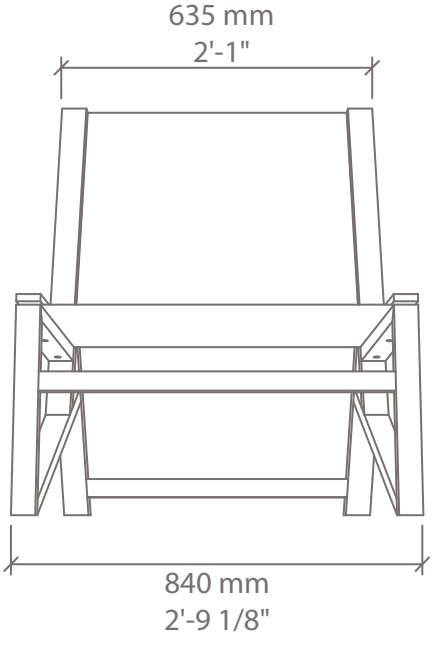
635 mm
2'-1"
840 mm
2'-9 1/8"

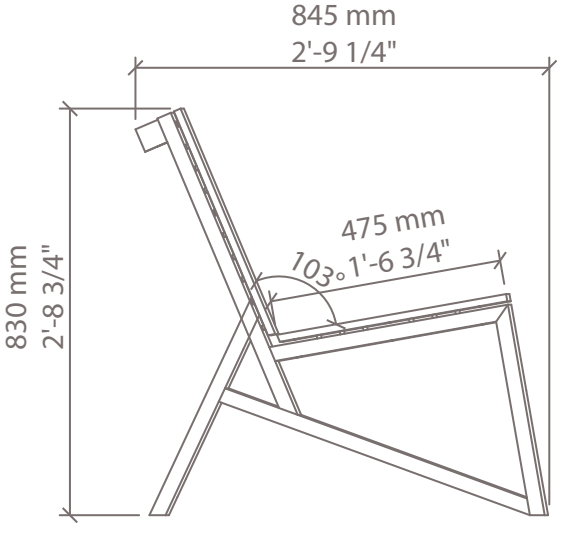
845 mm
2'-9 1/4"
830 mm
2'-8 3/4"
475 mm
1'-6 3/4"
103°

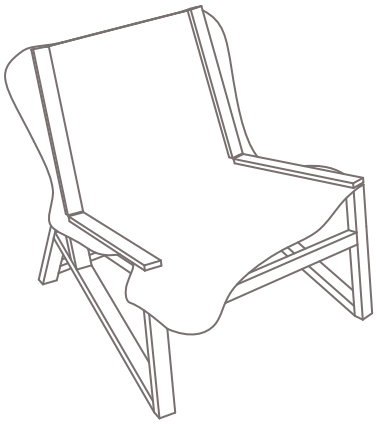

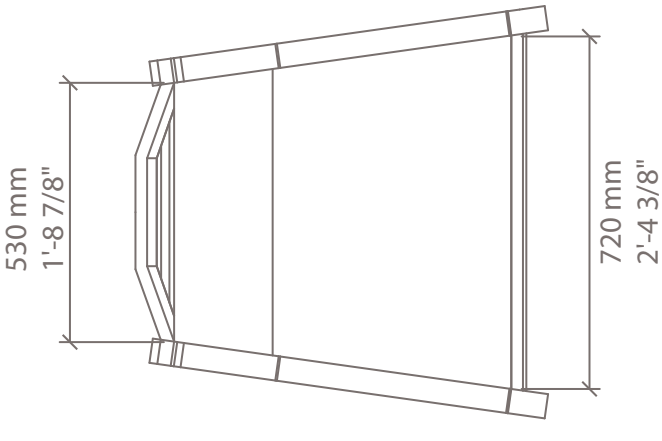
530 mm
1'-8 7/8"
720 mm
2'-4 3/8"