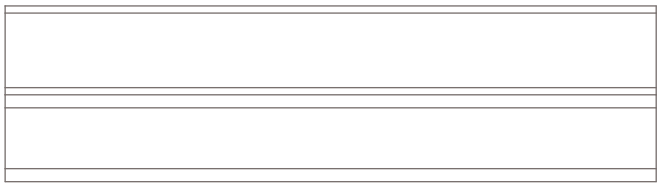

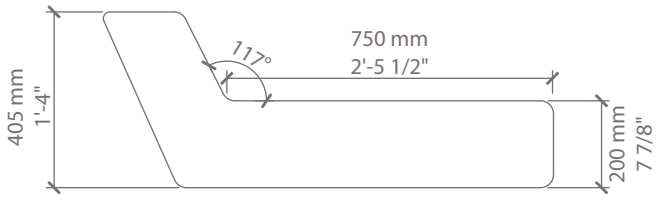
117°
750 mm
2'-5 1/2"
405 mm
1'-4"
200 mm
7 7/8"

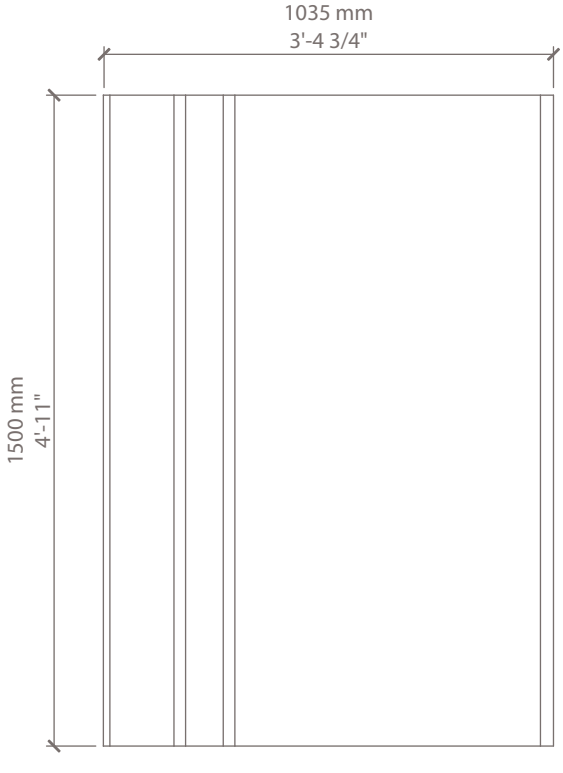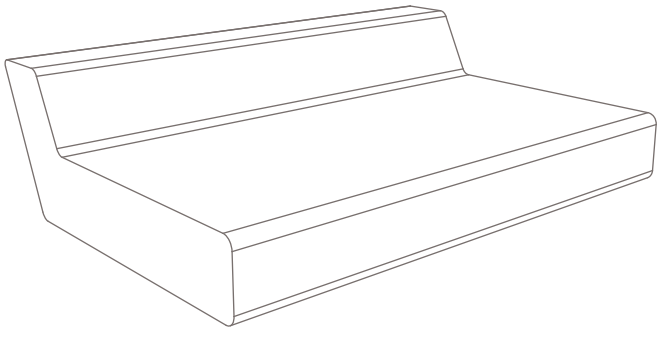
1035 mm
3'-4 3/4"
1500 mm
4'-11"