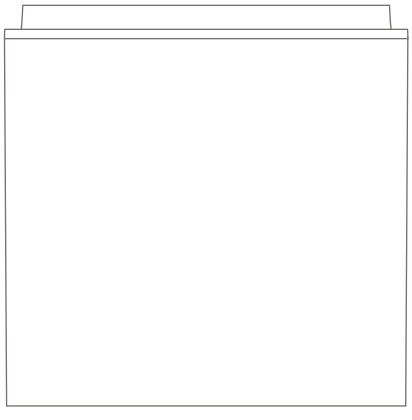

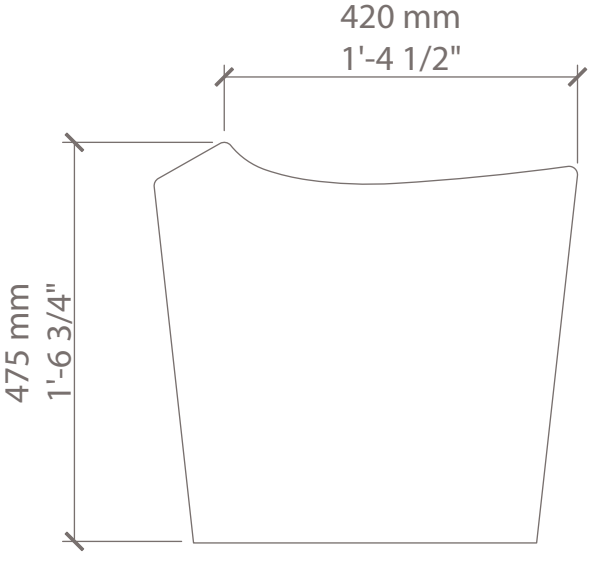
420 mm
1'-4 1/2"
475 mm
1'-6 3/4"

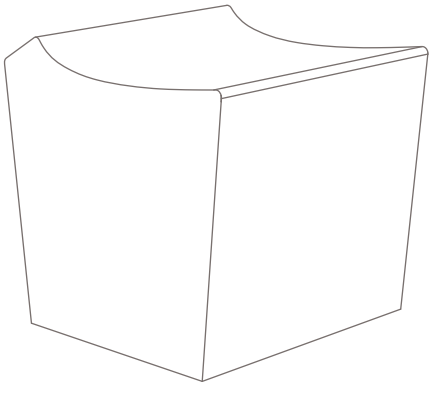

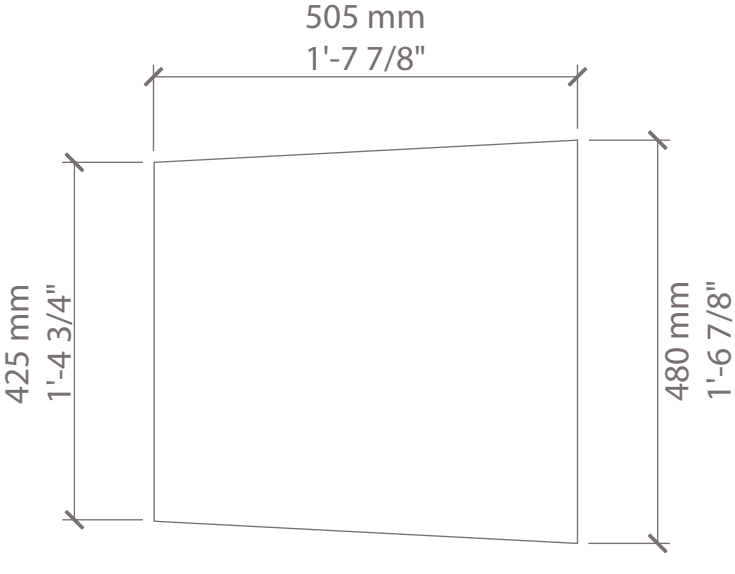
505 mm
1'-7 7/8"
425 mm
1'-4 3/4"
480 mm
1'-6 7/8"