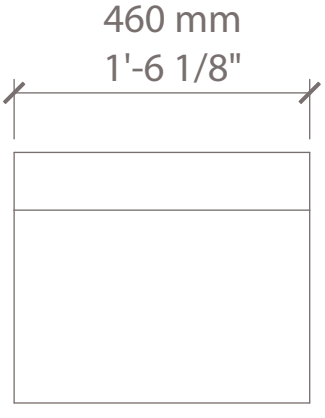
460 mm
1'-6 1/8"

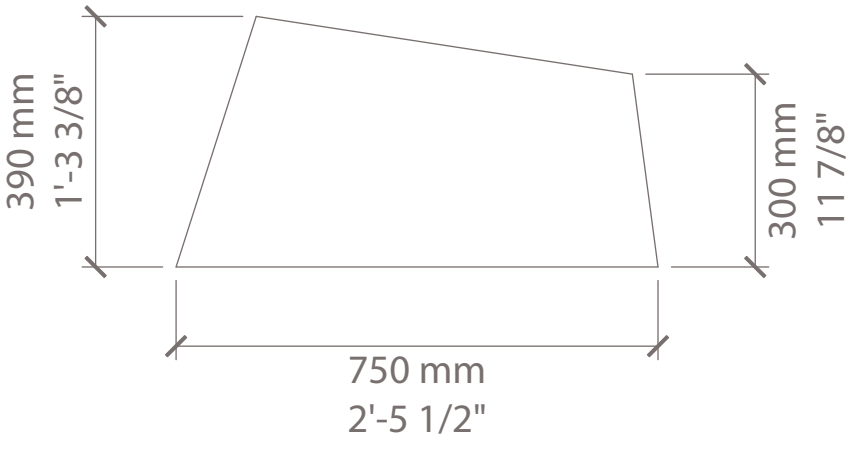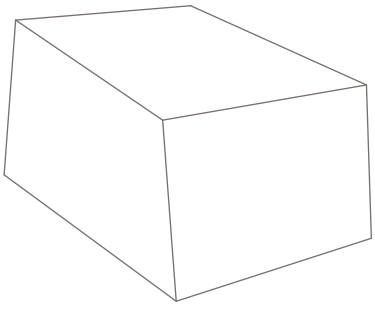
390 mm
1'-3 3/8"
300 mm
11 7/8"
750 mm
2'-5 1/2"